Computer Science
Artificial Intelligence
Informed Search

GATE

DPP: 1

Q1 Consider the search space depicted in the Figure below. S is the initial state. X, Y, an Z are the states that satisfy the goal test.
Use alphabetical order of nodes to break ties. Let P denote the set of states present in the optimal path using A* algorithm and Q represent the set of states present in the optimal path using GBFS. The cardinality of P ∩ Q is _____.

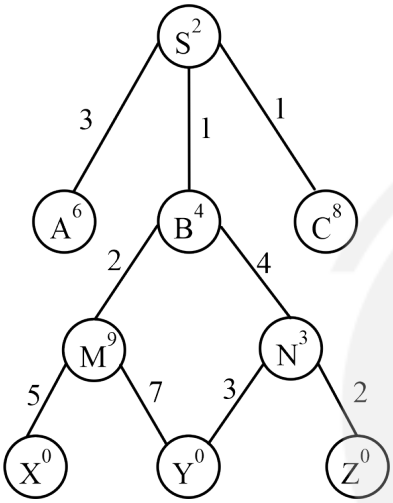

Q2 What can be the minimum value of 'x' possible to keep the graph consistent?

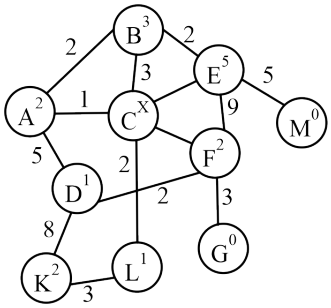

$2 \leq 1 + x$

$3 \leq 3 + x$

$x \leq 3$

Q3 You are performing Weighted A* search on the following graph where the start node is S, and the goal nodes are G1 and G2. The f-value is calculated using the formula: f(n)=g(n)+w×h(n) where the weight w for the heuristic is set to 3.

Calculate the size of the Open list after the completion of the entire process.

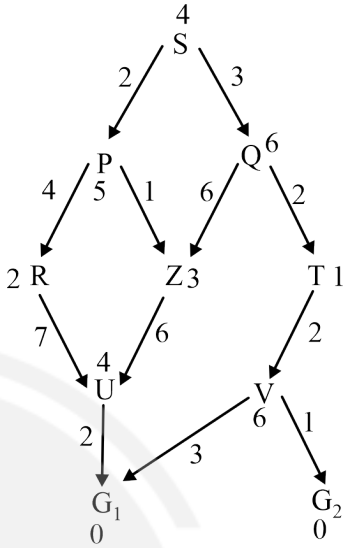

Q4 The branch factor for a graph is 5 and the depth threshold is 3. The difference between the worst case time and space complexity if Iterative Deepening A* search is used will be _____.

Q5 What will be the path cost in reaching the goal node G starting from node P, when Breadth First Heuristic Search algorithm is applied on the following graph?
Note: Use alphabetical order of nodes to break ties.

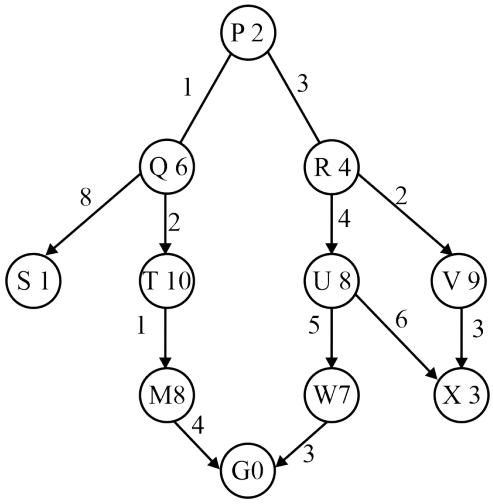

Android App | iOS App | PW Website

Q6 In a Hill Climbing problem, we have a graph where the nodes are represented by letters, and each letter is associated with a number based on its position in the alphabet (A = 1, B = 2, C = 3, ..., Z = 26). Z is the start node and G,K, and L are the goal nodes. Determine the code (number) corresponding to the letter on which the Hill Climbing algorithm will stop.

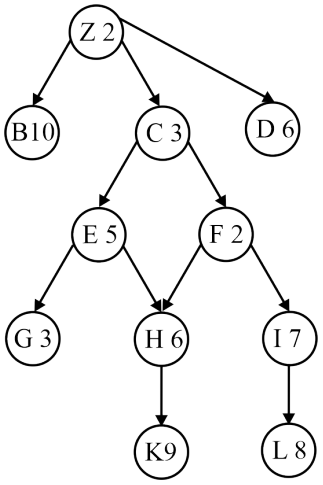

Q7 Calculate the bound of the following graph where S is the Start node and G and F are goal nodes.]

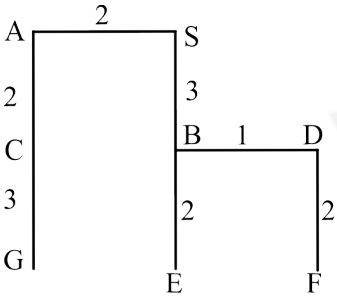

Q8 Count the number of nodes that will be pruned when branch and bound algorithm is applied on the following graph. S is the start node, U, V, X and Y are end nodes.

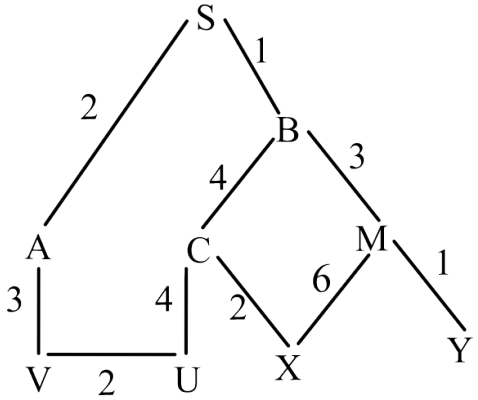

Q9 What will be the threshold value for second iteration when IDA* algorithm is used?

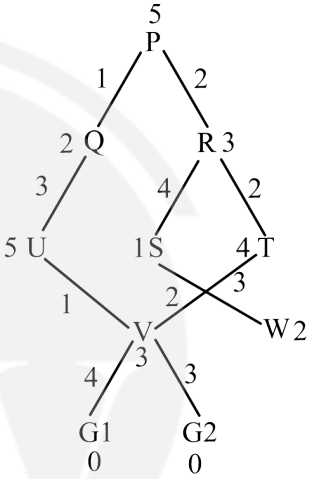

Q10 Let b denote the branching factor and d denote the maximum depth of a graph.
The difference between the worst case time complexity and worst case space complexity on this graph using BFHS is _____.

Android App | iOS App | PW Website

GATE

Answer Key

Q1	3	Q6	26
Q2	1	Q7	6
Q3	9	Q8	2
Q4	110	Q9	7
Q5	15	Q10	0

Android App | iOS App | PW Website

Hints & Solutions

Q1 Text Solution:

Using GBFS

S→B→N→Y

Using A*

	S	A	C	B	N	Z
S	0	0	0	0	0	
A	9	9	9	9	9	
B	5	5	5	5	5	
C	9	9	9	9	9	
M	∞	∞	∞	12	12	
N	∞	∞	∞	8	8	
X	∞	∞	∞	∞	∞	
Y	∞	∞	∞	∞	8	
Z	∞	∞	∞	∞	7	

S→B→N→Z

P∩Q = {S, B, N}

|P∩Q| = 3

Q2 Text Solution:

The condition to be satisfied is

$2 \leq 1 + x$

$3 \leq 3 + x$

$x \leq 3$

The minimum value that satisifes the condition is 1.

Hence, x = 1

Q3 Text Solution:

Open list:

	S	P	R	Z	Q	T	U
S	0	0	0	0	0	0	0
P	17	17	17	17	17	17	17
Q	21	21	21	21	21	21	21
R		12	12	12	12	12	12
Z		12	12	12	12	12	12
T					8	8	8
U			25	21	21	21	21
C						25	25
G1							11
G2							

S, P, Q, R, Z, V, T, U, G

= 9

Q4 Text Solution:

In IDA*,

Time complexity = $0(b^d) = 5^3 = 125$

Space complexity = 0(bd) = 5 ×3 = 15

= 125 – 15 = 110

Q5 Text Solution:

Closed list : P R Q S U X W G

Oen list : ~~P~~ ~~R~~ ~~Q~~ ~~U~~ V ~~S~~ ~~T~~ ~~X~~ ~~W~~ ~~G~~

Path List = 3 + 4 + 5 + 3 = 15

Q6 Text Solution:

The algorithm will stop at Z itself as Z is the local minima (have smallest heuristic value) as compared to its neighbors B, C, and D.

The code for Z is 26.

Q7 Text Solution:

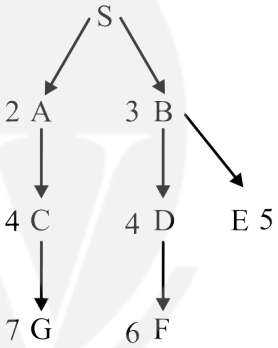

S →B→ D→ F = 6

Q8 Text Solution:

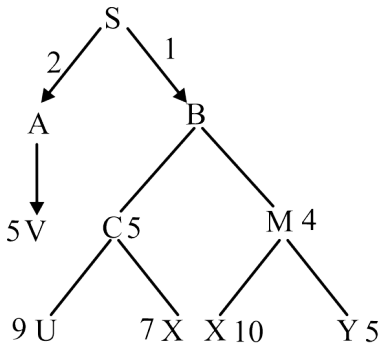

As bound is 5 and U, X is exceding the bound.

∴ Answer = 2.

Q9 Text Solution:

Android App | iOS App | PW Website

GATE

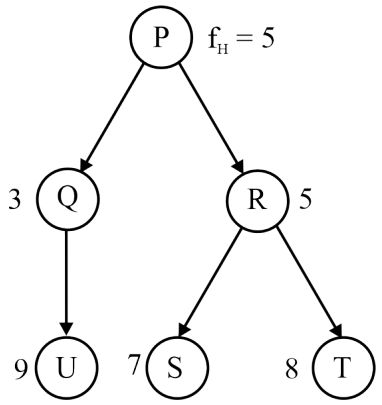

Min of pruned values = next thereshold = 7

Q10 Text Solution:

TC = 0 (b^d)

WC = 0 (b^d)

Diff. = 0

Android App | iOS App | PW Website